Installation and Operating Manual

Blower block

OMEGA 5 P

No.: 9_6913 27 USE

Manufacturer:

KAESER KOMPRESSOREN SE

96410 Coburg • PO Box 2143 • GERMANY • Tel. +49-(0)9561-6400 • Fax +49-(0)9561-640130

www.kaeser.com

Contents

List of Illustrations

List of Illustrations

List of Tables

List of Tables

1 Regarding this Document

1.1 Using this document

This document, hereafter called the service manual, contains important information about all life phases of the machine.

The operating manual is a component of the product. It describes the machine as it was at the time of first delivery after manufacture.

- ➤ Keep the service manual in a safe place throughout the life of the machine.
- ➤ Supply any successive owner or user with this service manual.
- ➤ Please insert any amendment or revision of the service manual sent to you.
- ➤ Enter details from the machine nameplate and individual items of equipment in the table in chapter 2.

1.2 Further documents

Included with this service manual are additional documents intended to assist in the safe and sure operation of the blower:

- Installation declaration in accordance with applicable directives.

Missing documents can be requested from KAESER.

- ➤ Make sure all documents are complete and observe the instructions contained in them.
- ➤ Make sure you provide the data from the nameplate when ordering documents.

1.3 Copyright

1.4 Symbols and labels

- ➤ Please note the symbols and labels used in this document.

1.4.1 Warnings

Warnings indicate danger potentially resulting in personal injury, if the measures specified are not taken.

Warnings indicate three levels of danger identified by the corresponding signal word:

Signal word	Meaning	Consequences of non-compliance
DANGER	Warns of imminent danger	Will very likely result in death or severe injury
WARNING	Warns of potentially imminent danger	May result in death or severe injury
CAUTION	Warns of a potentially dangerous situation	May result in moderate physical injury or damage to equipment

Tab. 1 Danger levels and their definition

Some warning notes may precede a chapter. They apply to the entire chapter including all sub-sections.

Example:

> **⚠ DANGER**
> *The type and source of the imminent danger is shown here!*
> *The possible consequences of ignoring a warning are shown here.*
> *The word "DANGER" indicates that death or severe injury can very likely result from ignoring the warning.*
> ➤ *The measures required to protect yourself from danger are shown here.*

Warning notes referring to a sub-section or the subsequent step are integrated into the procedure and numbered as a step.

Example:

1. **⚠ WARNING** *The type and source of the imminent danger is shown here!*
   The possible consequences of ignoring a warning are shown here.
   The word "WARNING" indicates that death or severe injury may result from ignoring the warning.
   ➤ *The measures required to protect yourself from danger are shown here.*
2. Always read and comply with warning instructions.

1.4.2 Potential damage warnings

Contrary to the warnings shown above, damage warnings do not indicate potential personal injury.

Damage warnings have only one danger level, identified by this signal word:

Signal word	Meaning	Consequences of non-compliance
NOTE	Warns of a potentially dangerous situation	Damage to property is possible

Tab. 2 Danger levels and their definition (damage to property)

Example:

> ***NOTICE***
> *The type and source of the imminent danger is shown here!*
> *Potential effects when ignoring the warning are indicated here.*
> ➤ *The protective measures against the damages are shown here.*

➤ Carefully read and fully comply with warnings against damages.

1.4.3 Other alert notes and their symbols

This symbol indicates particular important information.

Material — Here you will find details on special tools, operating materials or spare parts.

Precondition — Here you will find conditional requirements necessary to carry out the task.
The conditions relevant to safety shown here will help you to avoid dangerous situations.

Option B7 — ➤ This symbol denotes lists of actions comprising one stage of a task.
Operating instructions with several steps are numbered in the sequence of the operating steps. Information relating to one option only are marked with an option code (e.g., B7 indicates that this section refers only to blower blocks with a drive shaft left). Option codes used in this operating manual are explained in chapter 2.2.

Information referring to potential problems is identified by a question mark.
The cause is specified in the help text ...
➤ ... as is a solution.

This symbol refers to important information or measures concerning environmental protection.

Further information — Further subjects are introduced here.

2 Technical Data

2.1 Nameplate

Two nameplates are attached to the enclosure body at the control side of the blower block.

➤ Enter here the nameplate data as a reference:

Feature	Value
Model	
Material No.	
Serial No.	
Year of manufacture	
Equipment No.	

Tab. 3 Nameplate

2.2 Option codes

The table contains a list of available options.
Any options installed are listed on the nameplate.

➤ Enter options here as a reference:

Option	Option code	Supplied?
Direction of flow: Vertical	B5	
Direction of flow: Horizontal	B6	
Direction of rotation: Left	B11	
Direction of rotation: Right	B12	
Operating mode: Gauge pressure	B13	
Operating mode: Vacuum	B14	
Rotors: 2-lobe	B15	—
Rotors: 3-lobe	B16	✓
Material, rotors: Spheroidal graphite iron	B17	✓
Material, rotors: Stainless steel	B18	—
Material, housing: Grey cast iron	B19	✓
Material, housing: Ni-Resist	B20	—
Interior sealing: Rectangular ring	B21	
Interior sealing: Rectangular ring, hardened	B22	
Interior sealing: Vacuum seal	B23	—
Interior sealing: Vacuum/gauge pressure sealing	B24	—
Exterior sealing: Radial shaft sealing ring FKM	B25	
Exterior sealing: Radial shaft sealing ring PTFE	B26	

Supplied: ✓
Not available: —

Option	Option code	Supplied?
Exterior sealing: Sliding ring	B27	
Oil sight glass position: Left	B28	
Oil sight glass position: Right	B29	
Oil sight glass position: Left/right	B30	
Oil sight glass version: Flat	B31	
Oil sight glass version: Dome-shaped	B32	
Oil slinging disc: Secondary rotor, gear- and drive-end	B34	—
Oil slinging disc: Primary rotor, gear-end and secondary rotor, drive-end	B35	—
Oil slinging disc: Primary rotor, gear- and drive-end	B36	—
Discharge port: Below	B38	
Discharge port: Above	B39	
Discharge port: Left	B40	
Discharge port: Right	B41	
Supplied: ✓ Not available: —		

Tab. 4 Option codes

2.3 Weight

	OMEGA 52 P	OMEGA 53 P	OMEGA —	OMEGA —
Weight [lb]	377	459	—	—

Tab. 5 Weight

2.4 Pressure

	OMEGA 52 P	OMEGA 53 P	OMEGA —	OMEGA —
Maximum working pressure [psi (g)]	14.5	14.5	—	—
Maximum pressure differential Δp in gauge pressure operation [psi] *	14.5	14.5	—	—
Maximum pressure differential Δp in vacuum operation [psi] *	7.3	7.3	—	—

* Differential: Discharge pressure to inlet pressure

** Ratio: Block discharge temperature (absolute) to intake pressure (absolute)

	OMEGA 52 P	OMEGA 53 P	OMEGA —	OMEGA —
Maximum compression ratio **	2.0	2.0	—	—

* Differential: Discharge pressure to inlet pressure

** Ratio: Block discharge temperature (absolute) to intake pressure (absolute)

Tab. 6 Pressure

2.5 Flow rate

The effective flow rate is dependent on speed and pressure conditions.

	OMEGA 52 P	OMEGA 53 P	OMEGA —	OMEGA —
Nominal flow rate [cfm]	1011.41	1446.49	—	—

Tab. 7 Theoretical flow rate at maximum speed

2.6 Power and speeds

Required power consumption

The power requirement is related to the required operating point.

	OMEGA 52 P	OMEGA 53 P	OMEGA —	OMEGA —
Power requirement [hp]	1.92–75.55	2.55–100.54	—	—

Tab. 8 Power requirement

Permissible speeds

Rotary lobe speed during operation	OMEGA 52 P	OMEGA 53 P	OMEGA —	OMEGA —
Maximum [rpm]	4400	4200	—	—
Minimum [rpm]	700	700	—	—

Tab. 9 Speeds

2.7 Drive shaft load

	OMEGA 52 P	OMEGA 53 P	OMEGA —	OMEGA —
Maximum radial load [lbf]	807	818	—	—

Tab. 10 Drive shaft load

2.8 Flange connection

	OMEGA 52 P	OMEGA 53 P	OMEGA —	OMEGA —
Inlet port DN [in]	5.9	5.9	—	—
Discharge port DN [in]	5.9	5.9	—	—

Tab. 11 Connection dimensions

2.9 Lubricating oil

The lubricating oil type to be used depends on the operating conditions.

	OMEGA FLUID	
	SB 220	FGB 220
Description	Synthetic oil	Synthetic oil
Application	Suitable for all applications except the processing of food products.	Specifically for machines used in applications where the compressed air may come into contact with food products.
Oil temperature [°F]	14 – 248*	23 – 230
* For oil temperatures >248 °F, special measures are required. Consult KAESER for advice.		

Tab. 12 Lubricating oil

Further information An adhesive label indicating the lubricating oil used is attached to the blower block.
If required, information on ordering lubricating oil can be found in chapter 11.2.

2.10 Lubricating oil charge

The block oil chambers are filled with oil at the factory.

Lubricating oil charge [qt] – recommended values

Flow direction	Drive end	Control end
Vertical (Option B5)	0.53	0.63
Horizontal (Option B6)	0.34	0.45

Tab. 13 Lubricating oil charge

2.11 Ambient and inlet conditions

Characteristic	Value
Permissible ambient temperature [°F]	5 – 140
Permissible inlet temperature [°F]	5 – 104
Relative humidity [%]	0 – 80

Tab. 14 Ambient and inlet conditions

2.12 Temperature

Characteristic	Value
Maximum block discharge temperature [°F]	320
Maximum temperature differential [°F] *	120
* Discharge temperature minus inlet temperature	

Tab. 15 Conveying medium temperature

2.13 Noise emissions

The blower block constitutes an incomplete machine. Noise emissions values are dependent upon the design of the complete machine in which the blower block is installed. The specification of these values is the responsibility of the customer or fitter.

For guidance, noise emissions values are provided below for blower machines under the following conditions:

- With drive motor
- With inlet silencer
- With discharge silencer
- Without sound enclosure
- Noise measurement based on DIN EN ISO 2151 as per basic standard ISO 3744 or ISO 9614-2
- Uncertainty ±3 dB(A) for each specified sound power level
- The measuring surface encloses the intake opening for the air to be compressed, but not the exhaust opening for the compressed air generated

The actual values are dependent upon:

- Pressure
- Speed
- Silencer version and type

Noise power level [dB(A)]

Operating mode	OMEGA 52 P	OMEGA 53 P	OMEGA —	OMEGA —
Pressure (Option B13)	96–118	88–115	—	—
Vacuum (Option B14)	100–114	102–115	—	—

Tab. 16 Noise power level

3 Safety and Responsibility

3.1 Basic instructions

The blower block is manufactured to the latest engineering standards and acknowledged safety regulations. Nevertheless, dangers can arise through its operation:

- danger to life and limb of the operator or third parties,
- damages to the blower block and other material assets.

⚠ Disregard of these instructions can result in serious injuries.

➤ Read the operating and installation instruction carefully and take note of the contents for safe machine operation.

➤ Use the blower block only if it is in a technically perfect condition and only for the purpose for which it is intended; and observe all safety measures and the instructions in the service manual.

➤ Immediately rectify (have rectified) any faults that could be detrimental to safety!

3.2 Specified use

The blower block is designed exclusively for installation in machines generating positive pressure in a commercial or industrial environment where nitrogen (hereafter also referred to as "medium") as a delivery medium is approved for use. Any other use is considered incorrect. The manufacturer is not liable for any damages that may result from incorrect use. The user alone is liable for any risks incurred.

➤ Comply with the instructions in this service manual.

➤ Operate the blower block only within its performance limits and under the permitted ambient and inlet conditions.

➤ Do not operate the block without pipework or silencers connected to the inlet and outlet.

➤ Do not use compressed air for breathing purposes unless it is specifically treated.

➤ Do not use the medium for any application that will bring it into direct contact with food products unless it is specifically treated.

3.3 Improper use

Improper use can cause damage to property and/or (severe) injuries.

➤ Only use the blower block as intended.

➤ Never direct compressed air at persons or animals.

➤ Do not allow the machine to take in toxic, acidic, flammable or explosive gases or vapors.

➤ Do not operate the blower block in areas in which specific requirements with regard to explosion protection are in force.

3.4 Operator's responsibilities

3.4.1 To be noted when integrating in a machine

The block will become an integral part of the machine into which it is installed. Therefore, it is the responsibility of the machine manufacturer to ensure that the block is suitable for the corresponding application and that the necessary conditions for its safe and reliable operation are defined.

➢ Check the suitability of the blower block and the conditions under which it will operate.

3.4.2 Observe statutory and universally accepted regulations

These are, for example, nationally implemented European directives and/or applicable national legislation, safety and accident prevention regulations.

➢ Observe the statutory and universally accepted regulations when operating the blower block.

3.4.3 Determining personnel

Suitable personnel are experts who, by virtue of their training, knowledge and experience as well as their knowledge of relevant regulations can assess the work to be done and recognize the possible dangers involved.

Authorized assembly personnel possess the following qualifications:

- are of legal age,
- have read, understood and will abide by the safety instructions and operating manual,
- must be completely familiar with the safety concepts and regulations of drive, vacuum and compressed air technology,
- are able to recognize the possible dangers of drive, compressed air and vacuum technology and take appropriate measures to safeguard persons and property,
- have received adequate training and authorization for safe assembly.

➢ Ensure that personnel entrusted with assembly, installation, operation, and maintenance are qualified and authorized to carry out their tasks.

3.5 Dangers

Basic instructions

The following describes the various forms of danger that can occur during block operation.

Basic safety instructions are found in this service manual at the beginning of each chapter in the section entitled “Safety”.

Warning instructions are found before a potentially dangerous task.

3.5.1 Safely dealing with sources of danger

Information concerning the various forms of danger that can arise during the operation of the blower block are found here.

Forces of compression

Compressed air is contained energy. Uncontrolled release of this energy can cause serious injury or death. The following information concerns any work on components that could be under pressure.

- ➤ Close shut-off valves or otherwise isolate the block from the compressed air network to ensure that no compressed air can flow back into the blower block.
- ➤ Fully depressurize all pressurized components and enclosures.
- ➤ Welding, heat treatment and mechanical changes are forbidden as they can adversely affect the strength of the material.
  The safety of the machine is then no longer ensured.

Compressed air quality

The composition of the compressed air must be suitable for the actual application in order to preclude health and life-threatening dangers.

- ➤ Never directly inhale compressed air.
- ➤ Use appropriate systems for air treatment before using the compressed air from this blower block as breathing air and/or for the processing of comestibles.
- ➤ Use lubricating oil compatible with food products if compressed air can come into contact with them.

Quality of discharge air

The quality of the discharge air and any substances it may contain depends on the quality of the air drawn from the vacuum network.

- ➤ Never breathe in exhaust air.
- ➤ Ensure that the discharge air is led to the outdoors through a point far away from any persons.

Rotating components

Contact with rotating drive shafts or rotors can cause severe injury.

- ➤ Secure the blower block against unintended starting.
- ➤ Wear close-fitting clothes and a hair net if necessary.
- ➤ Make sure all covers and guards are in place and secure to prevent accidental contact.

Temperature

High temperatures are generated during compression. Touching hot components may cause injuries.

- ➤ Do not touch the hot blower block.
- ➤ Avoid contact with hot oil when changing the oil.
- ➤ Wear protective clothing.

Noise

The non-insulated blower block generates high noise emissions potentially resulting in hearing damage.

- ➤ Operate the machine only with adequate sound insulation.
- ➤ Wear hearing protection if necessary.

Operating fluids/materials

The used operating fluids and materials can cause adverse health effects. Suitable safety measures must be taken in order to prevent injuries.

- ➤ Strictly forbid fire, open flame and smoking.
- ➤ Follow safety regulations when dealing with oils, lubricants and chemical substances.
- ➤ Avoid contact with skin and eyes.
- ➤ Do not inhale oil mist and vapors.
- ➤ Do not eat or drink while handling cooling and lubricating fluids.
- ➤ Keep suitable fire-extinguishing agents ready for use.
- ➤ Use only KAESER approved operating materials.

Unsuitable spare parts

Unsuitable spare parts compromise the safety of the blower block.

- ➤ Use only spare parts that have been approved by the manufacturer for use in this blower block.
- ➤ Use only original KAESER spare parts on pressure bearing parts.

Conversion or modification of the blower block

Modifications, additions or conversions to or of the blower block can result in unpredictable hazards.

- ➤ Do not permit conversion or modification as this can compromise function and safe operation.

3.5.2 Organizational measures

- ➤ Designate personnel and their responsibilities.
- ➤ Give clear instructions on reporting faults and damage to the block.
- ➤ Give instructions on fire reporting and fire fighting measures.

3.5.3 Using the blower block safely

Here you will find information regarding rules of conduct that will support you in the safe handling of the blower block during the individual product life phases.

Personal protective equipment

When working on the blower block, you may be exposed to dangers that can result in accidents with severe adverse health effects.

- ➤ Wear suitable protective clothing when performing work.

Suitable protective clothing (examples):

- Safety workwear
- Protective gloves
- Safety shoes
- Eye protection
- Ear protection

Transportation

The weight and size of the blower block require safety measures to be taken during transportation in order to prevent accidents.

- ➤ Use suitable hoists which conform to local safety regulations.
- ➤ Only permit transportation by personnel who, due to their training, possess the appropriate authorization for safe handling of transported goods.
- ➤ Only attach hoists to suitable lifting points.
- ➤ Pay close attention to the center of gravity to prevent the risk of tipping.
- ➤ Make sure the danger zone is cleared of personnel.

Assembly

- ➤ Use suitable fixing elements to secure the blower block to a solid, level base free from tension.
- ➤ Install/remove compressed air lines only when fully vented.
- ➤ Use pressure lines that are suitable and approved for the maximum working pressure, the intended medium and the expected temperatures.
- ➤ Install connection pipes free from tension.
- ➤ Do not introduce any forces into the blower block via the connections, whereby the pressure forces must be balanced out by bracing.

⚠ WARNING

Serious injury can result from confusing the connections for the intake and discharge ports!

- ➤ *Before installing the blower block in the machine, check the connections as per chapter 4.2.3.*

Installation

Installing the machine in a suitable location reduces the potential for accidents and faults.

- ➤ Install the machine in a suitable machine room.
- ➤ Ensure sufficient and suitable lighting for work to be carried out safely.
- ➤ Ensure sufficient accessibility that all work on the blower block can be carried out without danger or hindrance.
- ➤ Do not operate in areas in which there are specific requirements with regard to explosion protection in force.
- ➤ Ensure adequate ventilation.
- ➤ Install the blower block in such a manner that the working conditions around it are not impaired.
- ➤ Do not exceed the limit values for ambient temperature.
- ➤ Ensure clean intake air with no harmful components.
  Harmful components include, for example: explosive or chemically unstable gases and vapors, acids or base-forming substances such as ammonia, chlorine or hydrogen sulfide.
- ➤ Keep suitable fire-extinguishing agents ready for use.

Commissioning, operation and maintenance

During commissioning, operation and maintenance you may be exposed to dangers resulting from, e.g., pressure and temperature. Careless actions can lead to accidents with severe consequences for your health.

- ➤ The device must be operated by authorized personnel only.
- ➤ Wear close-fitting, flame-retardant clothing. Wear suitable protective clothing if necessary.
- ➤ Close shut-off valves or otherwise isolate the blower block securely from the compressed air network in order to ensure that no compressed air can flow back into the blower block.
- ➤ Vent all pressurized components and enclosures, then verify.
- ➤ Allow the blower block to cool down sufficiently.
- ➤ Only use spare parts approved by KAESER for use in this blower block.
- ➤ Carry out regular inspections for visible damage.
- ➤ Pay particular attention to cleanliness during all maintenance and repair work. Cover components and exposed openings with clean cloths, paper or tape in order to keep them clean.
- ➤ Do not leave any loose components, tools or cleaning rags on or in the blower block.
- ➤ Components removed from the device can still pose a safety risk:
  Do not attempt to open or destroy any components removed from the device.

Decommissioning/storage/disposal

Improper handling of used operating fluids/materials and components represents a danger to the environment.

- ➤ Drain off operating fluids and dispose of them in accordance with environmental regulations.
- ➤ Return the blower block to KAESER for disposal and attach a completed Declaration of Contamination.

3.6 Danger areas

The table below gives information on areas dangerous to personnel.

Only authorized personnel may enter these areas.

The danger areas related to the following activities are to be defined by the user of the machine into which the blower block is built:

- Commissioning
- Operation
- Maintenance
- Decommissioning

Activity	Danger area	Authorized personnel
Transport	3 ft. radius	Installation personnel for transport preparation. No personnel during transport.
	Beneath the lifted block.	No personnel!
Installation	3 ft. radius	Installation personnel

Tab. 17 Danger areas

3.7 Safety sign

The diagram shows the location of safety signs on the blower block. The table lists the various safety signs used and their meanings.

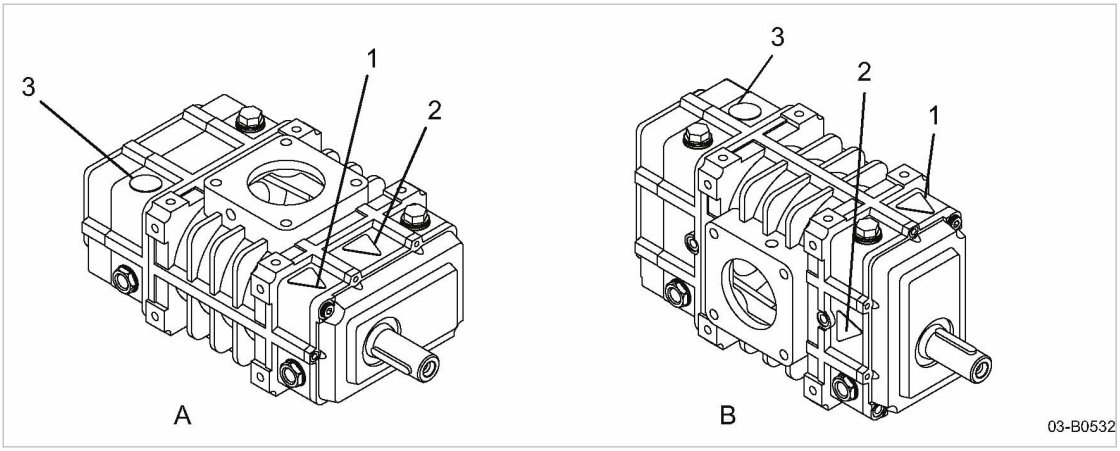

Fig. 1 Location of safety signs

Ⓐ Flow direction: vertical (Option B5)
Ⓑ Flow direction: horizontal (Option B6)

Location	Sign	Meaning
1		Hot surface! Risk of burns caused by contact with hot components. ➤ Do not touch the surface. ➤ Wear long-sleeved garments (no synthetics such as polyester) and protective gloves.
2		Risk of serious injuries (to the hands, in particular) or even severing of extremities from rotating components! ➤ Operate the machine only with closed flange connections. ➤ Switch off and lockout and tagout the power supply disconnecting device.
3		Risk of personal injury or damage to the machine due to incorrect operation! ➤ Read and understand the Operating Manual and all safety information before switching on this machine.

Tab. 18 Safety signs

3.8 In emergency

3.8.1 Correct fire fighting

Suitable extinguishing agents

- Foam
- Carbon dioxide
- Sand or dirt

Unsuitable or unsafe extinguishing agents

- Strong jet of water

1. Keep calm.
2. Give the alarm.
3. Switch off the power supply disconnecting device, if possible.

4. Move to safety.
   - Warn persons in danger.
   - Help incapacitated persons.
   - Close the doors.
5. Try to extinguish the fire if you have the skill to do so.

3.8.2 Remove lubricating oil from the skin.

➤ Eye contact:
Rinse eyes thoroughly with lukewarm water and seek medical assistance.

➤ Skin contact:
Wash off immediately.

3.9 Environmental protection

➤ Store and dispose of operating materials and replaced parts in accordance with local environmental protection regulations.

➤ Observe national regulations.
This applies particularly to parts contaminated with lubricating oil.

➤ Do not allow lubricating oil to escape to the environment or into the sewage system.

3.10 Warranty

This service manual contains no independent warranty commitment. Our general terms and conditions of business apply with regard to warranty.

A condition of our warranty is that the machine is used for the purpose for which it is intended under the conditions specified.
Due to the multitude of applications for which the blower block is suitable, the user is obliged to determine its suitability for their specific application.

Furthermore, we do not assume any warranty obligation for damages caused by:

- the use of unsuitable parts or operating materials,
- unauthorized modifications,
- incorrect maintenance,
- incorrect repair.

Correct maintenance and repair includes the use of genuine KAESER spare parts and operating materials.

➤ Obtain confirmation from KAESER that your specific operating conditions are suitable.

4 Design and Function

4.1 Blower block function

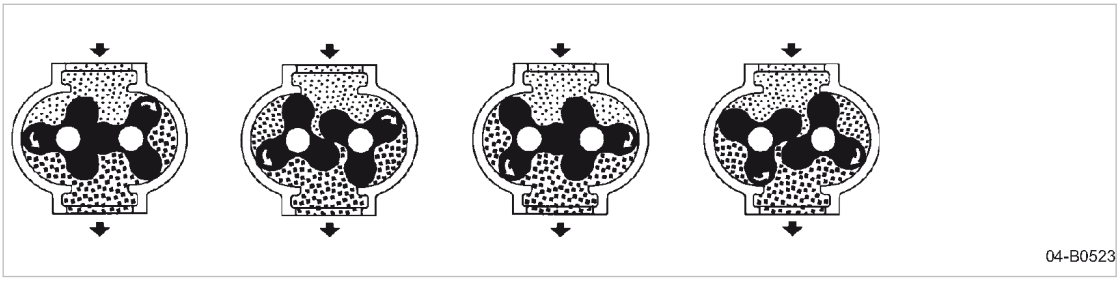

Fig. 2 Principle of compression

A pair of rotors with inter-meshing lobes rotate in opposite directions within a casing. The rotors are synchronized by timing gears on one end. Air in the block inlet is trapped between the rotor lobes and the casing and moved round to the discharge port.

As there is no contact between the rotors themselves and the casing, oil film lubrication is not required.

4.2 Options

The blower block version is defined by the options.

Option codes for:

- Direction of flow,
- Position and direction of rotation of the drive shaft (viewed from visible shaft end),
- Position of the discharge port (viewed from visible shaft end),
- Operating mode,
- Rotor version,
- Rotor and enclosure material,
- Inner and outer seals,
- Position and design of the oil sight glasses

are printed on the nameplate of the blower block.

Further information An overview of the option codes can be found in chapter 2.2.

4.2.1 Option B5
Direction of flow: Vertical – Blower block overview

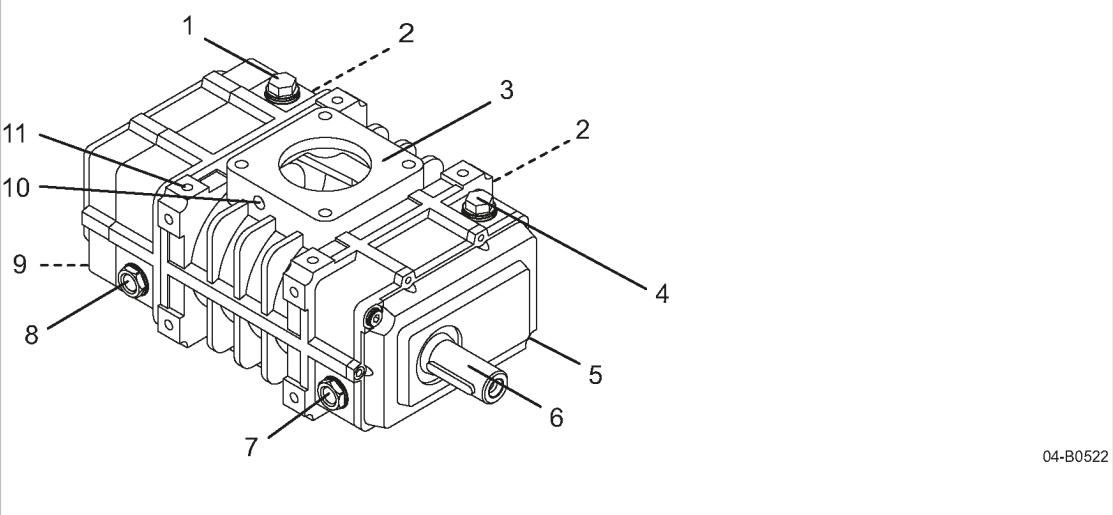

Fig. 3 Direction of flow: Vertical – Blower block overview

1. Gear-end oil inlet
2. Side gas drainage (closed)
3. Flange connection, both ends
4. Drive-end oil inlet
5. Drive-end oil drain
6. Drive shaft (primary rotor)
7. Drive-end oil sight glass
8. Gear-end oil sight glass
9. Gear-end oil drain
10. Connection for measuring devices
11. 16 x threaded holes for fixing

4.2.2 Option B6
Direction of flow: Horizontal – Blower block overview

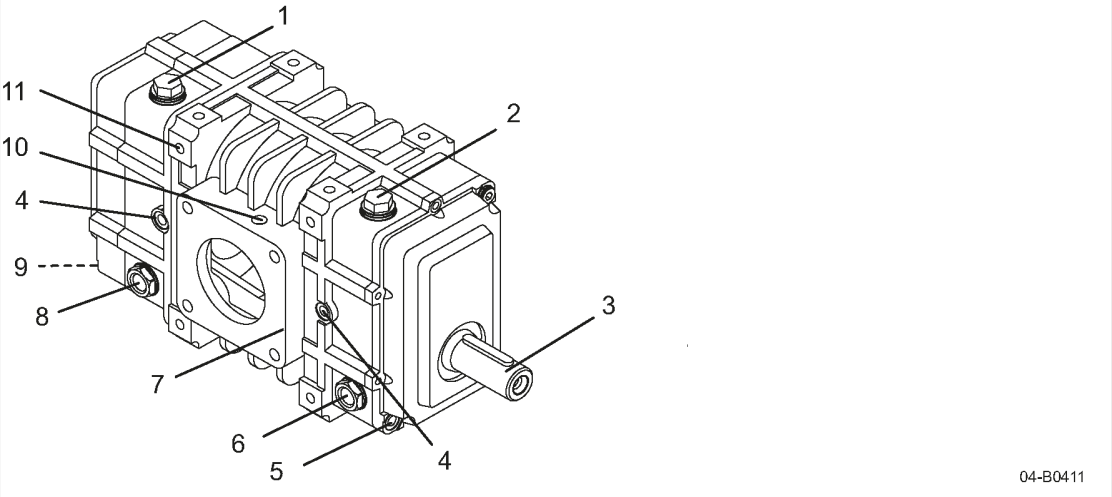

Fig. 4 Direction of flow: Horizontal – Blower block overview

1. Gear-end oil inlet
2. Drive-end oil inlet
3. Drive shaft (primary rotor)
4. Side gas drainage (closed)
5. Drive-end oil drain
6. Drive-end oil sight glass
7. Flange connection, both ends
8. Gear-end oil sight glass
9. Gear-end oil drain
10. Connection for measuring devices
11. 16 x threaded holes for fixing

4.2.3 Option B38, B39, B40, B41 Discharge port location

Depending on the options selected, the position of the discharge port is determined by looking at the visible shaft end.
Additionally, labels on the blower block serve to identify the intake and discharge ports.

⚠ WARNING

Serious injury can result from confusing the connections for the intake and discharge ports!

➤ *Before installing the blower block in the machine, check the position of the intake and discharge ports.*

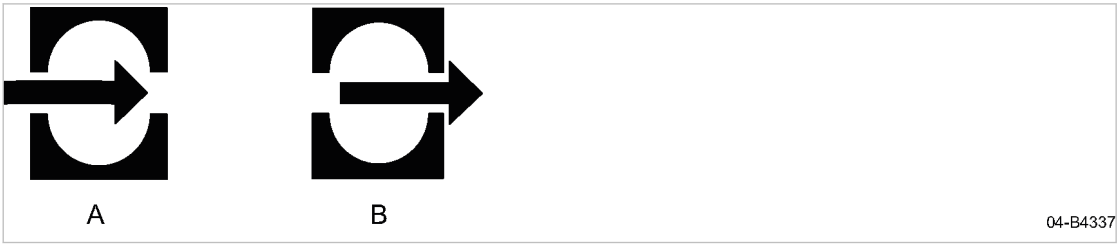

Fig. 5 Intake and discharge port symbols

Ⓐ Intake port (conveying medium inlet)
Ⓑ Discharge port (conveying medium outlet)

5 Installation and Operating Conditions

5.1 Ensuring safety

The conditions in which the block is installed and operated have a decisive effect on safety.

Warning instructions are displayed prior to a potentially dangerous task.

Disregarding warning instructions can cause serious injuries!

Complying with safety instructions

Disregard of safety instructions can cause unforeseeable dangers!

- ➤ Strictly forbid fire, open flame and smoking.
- ➤ If work is carried out on or near the machine, take adequate measures to prevent sparks or heat from igniting oil vapors or parts of the machine.
- ➤ Do not store inflammable material in the vicinity of the block.
- ➤ Keep suitable fire extinguishing agents ready for use.
- ➤ The blower block is not explosion-proof!
  Do not operate in areas in which specific requirements with regard to explosion protection are in force.
- ➤ Ensure sufficient and suitable lighting for the work to be carried out comfortably and safely.
- ➤ Do not operate the block without pipework or silencers connected to the inlet and outlet.
- ➤ Comply with the permissible ambient and intake conditions.
- ➤ Ensure the correct composition of the intake air:
  - clean with no damaging contaminants (e.g., dust, fibers, fine sand)
  - free of explosive or chemically unstable gases or vapors
  - free of acid/alkaline forming substances, particularly ammonia, chlorine or hydrogen sulfide

5.2 Determining the installation location

The blower block is intended for installing into a suitable machine.

- ➤ Install the machine in a suitable machine room with sufficient ventilation.
- ➤ Install only on a surface that is level and can support the weight of the blower block.
- ➤ If installed outdoors, the blower block must be protected from frost, direct sunlight, dust and rain.
- ➤ Ensure accessibility to the blower block so that all work can be carried out without danger or hindrance.
- ➤ Do not position the blower block in the warm exhaust air flow from other machines.

6 Installation

6.1 Safety

Follow these instructions to ensure safe installation.

Warning instructions are provided prior to any potentially dangerous task.

⚠ Disregard of warning instructions can result in life-threatening injuries!

Observe safety instructions

Disregard of safety instructions can cause unforeseen dangers.

- ➤ Follow the instructions in chapter 3 “Safety and Responsibility”.
- ➤ Installation work must be carried out by authorized personnel only!
- ➤ Ensure that no personnel are working on the machine.
- ➤ Before switching on, ensure that no personnel are working on the blower block.
- ➤ Ensure safe transportation of the blower block.

Working on the pressure system

Compressed air is stored energy. Uncontrolled release of this energy can cause serious injury or death. The following safety instructions relate to any work on components that might be pressurized.

- ➤ Close shut-off valves or otherwise isolate the blower block securely from the compressed air network in order to ensure that no compressed air can flow back into the blower block.
- ➤ Fully vent all pressurized components and enclosures.
- ➤ Do not open or dismantle any valves.

Further information

Information regarding authorized personnel can be found in chapter 3.4.3.

Information regarding dangers and the avoidance thereof can be found in chapter 3.5.

Information regarding safe transportation can be found in chapter 12.3.

6.2 Reporting transport damage

1. Check the blower block for visible and hidden transport damage.
2. Inform the carrier and the manufacturer in writing of any damage without delay.

6.3 Installation options

The block features housing feet on all sides to facilitate the various installation options.

The block may be installed for either a horizontal or vertical direction of flow.

The oil sight glasses and screw plugs must be installed in accordance with the direction of flow, and the gas drainage port must be opened or closed accordingly.

1. Check the position of the oil sight glasses and screw plugs.
2. If required, position the oil sight glasses and screw plugs as necessary.

Further information

Information regarding the optional directions of flow and gas drainage ports can be found in chapters 4.2.1 and 4.2.2

6.4 Installing the blower block

Precondition

Ensure that the machine in which the blower block is to be installed is isolated from the power supply and fully vented.

⚠ WARNING

Serious injury can result from loosening or opening components under pressure!

➤ *Fully vent all pressurized components and enclosures.*

⚠ CAUTION

Rotating lobes!
Danger of crushing or severing limbs.

➤ *Do not reach into the interior of the blower block.*

NOTICE

Damage to the machine from exceeding the maximum load on the drive shaft!

➤ *Do not lift the blower block onto the shaft end.*

➤ *Do not force the feather key on the shaft end in or out.*

Permissible angle deviation in horizontal position

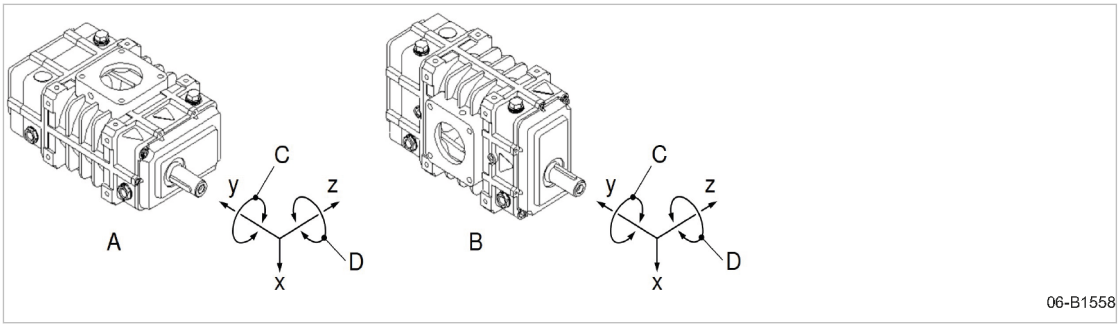

Fig. 6 Permissible angle deviation:

- (A) Direction of flow: vertical (Option B5)
- (B) Direction of flow: horizontal (Option B6)
- (C) Permissible incline on y-axis ± 5°
- (D) Permissible incline on z-axis ± 5°

1. Before installing the blower block, remove the transport plugs from the two gas drainage holes on the underside of the block, so as to prevent the ingress of lubricating oil into the flow chamber.

➤ The two gas drainage holes on the side must remain closed.
➤ Hold the lower two gas drainage holes open.
➤ The gear-end and drive-end oil chambers must not be connected with one another.

Leakage from the lower gas drainage holes.
➤ Collect the leakage in a suitable container and dispose of it in accordance with the applicable environmental regulations.
➤ Check the lubricating oil level and replenish if necessary.

2. Position the blower block against the adjacent construction, preferably from above, and fix in place using two screw connections on the drive-end and two on the gear-end.
Dimensions for the blower block fixing holes can be found in the dimensional drawing in chapter 13.2.

The design of the fixing screw connection for the blower block is the responsibility of the fitter / user.

Fixing must not be predominantly via hanging from the side or upper threaded holes, since the prevailing loads in this case can lead to deformation of the housing or blocking of the rotors.

In the event of deviating installation circumstances, please contact an authorized KAESER service representative.

The following instructions must be observed:

- The screw connections must be capable of bearing the external loads exerted upon the blower block.
- The loads transmitted at the drive shaft and flanges must be taken into account, in addition to the weight of the blower block itself.
- When installing, first fix three screw connections to the adjacent construction.
  Before tightening the remaining screw connections, support them using a suitable device, e.g. a shim, in order to avoid distortion or deformation of the enclosure.
  The permissible remaining gap between the adjacent construction and the blower block before tightening is 0.002 inches.

3. Check that the drive shaft can be turned freely by hand.
4. Remove the flange connection covers. Check the interior for dirt and foreign articles. If necessary, arrange for the blower block to be cleaned by an authorized KAESER service representative.
5. Use seals and flange connections at the intake and discharge ports that are suitable for the respective application. Prevent leaks from occurring in this area.

➤ When installing, take into account the maximum permissible loads on the intake and discharge ports as per Table 13.1.2.

The loads acting upon the intake and discharge ports can be reduced by absorbing the weight of the silencers, piping and other connected assemblies via auxiliary constructions.

➤ Adhere to the maximum permissible temperatures as per 2.12.

Thermally induced stresses can be reduced by the use of flexible pipe connections.

6.5 Installing the drive

The blower block can be driven using commercially available drives.

Precondition The drive power should be at least 12% more than that required by the blower block.

1. Drive the block in the specified direction of rotation only.
2. Ensure that the maximum permissible speed for the rotary lobes is not exceeded.
3. Axial forces acting on the drive shaft are not permitted.
4. Use couplings and belt pulleys that can be installed without applying axial force.
5. Use the center thread on the blower block drive shaft when hoisting V-belt pulleys and coupling parts.
6. Use suitable installation elements for connecting and aligning the blower block and the drive motor.

   The following instructions must be observed:
   - Adhere to the specifications of the belt pulley, belt or drive coupling manufacturers with regard to alignment of the shaft axes and the maximum permissible coaxiality.
   - Ensure that the resulting coaxiality deviation does not produce any additional rotational irregularity in the drive train or impermissible load on the blower block drive shaft. Adhere to the maximum permissible loads as per Table 13.1.1.
   - Adhere to the permissible loads on the drive shaft in all operating circumstances, particularly during the start-up phase and in transient operating states. Here, the moment of inertia for the rotating components in accordance with Table 13.1.3 must be taken into account.

Directly coupled drive with flexible coupling

1. Ensure a balance quality of Q < 6.3 at maximum speed.
2. The blower block drive shafts and the drive motor must be precisely aligned.

Refer to the coupling manufacturer's technical specifications for the running tolerances of the coupling.

It is recommended to calculate the critical rotational resonant frequency in order to avoid impermissible vibrations.

Belt drive

1. Ensure a belt drive misalignment of no more than ±0.5°.

   This applies to the following:
   - Parallel alignment of the drive shaft axes
   - Skew of the V-belts due to axial offset
2. Ensure that the blower block drive pulley meets the following quality requirements:
   - Balance quality: Q 6.3
   - Maximum V-groove concentricity error: 0.004 in.

3. Check belt tension and adjust if necessary:
   - Following commissioning
   - After every belt change:
     - After 30 minutes of operation
     - After 24 operating hours

Further information

Information about the maximum radial load for the blower block drive shaft can be found in chapter 2.7.

6.6 Safety devices to be installed by the user

Depending on the overall installation, various measures are needed to ensure safe and reliable operation of the blower block.

For example:

- A safety device for immediately shutting down the drive should the block rotate in the wrong direction.
- A flexible pipework design to prevent stress on the blower block due to heat expansion or any other forces.
- Suitable filtration to prevent the intake of dust or other foreign articles.
- Suitable components for reducing the sound emissions from the blower block:
  - Intake and discharge silencers
  - Sound enclosure
- Suitable safety device for stopping the machine in the event of the rotors becoming blocked due to an error.
- Blow-off or vacuum valve to prevent exceeding or falling below the permissible working pressure.
- Check valve for preventing a reverse in the direction of airflow.
  The check valve must be dimensioned according to the following parameters:
  - Size of the flange connection on inlet and discharge ports
  - Permissible pressure differential
- Unloaded start valve to ensure an unloaded machine start.
- Indicators for monitoring the following parameters at the inlet and discharge ports:
  - Temperature
  - Pressure or vacuum
- Automatic safety devices to shut the machine down should the permissible limits for the following parameters be reached:
  - Temperature
  - Pressure or vacuum
  - Current draw
- EMERGENCY STOP push button for immediate shutdown of the machine.

➤ Carefully assess the installation situation and seek advice from KAESER.

7 Initial Start-up

7.1 Ensuring safety

Here you will find instructions for safe commissioning of the machine.

Warning instructions are located before a potentially dangerous task.

⚠ Disregard of warning instructions can cause serious injuries!

Complying with safety notes

Disregard of safety notes can cause unforeseeable dangers!

- ➤ Follow the instructions in chapter 3 “Safety and Responsibility”.
- ➤ Commissioning tasks may only be carried out by authorized personnel!
- ➤ Make sure that no one is working on the machine.
- ➤ Make sure no personnel are working on the blower block before switching on.

Working on the compressed air system

Compressed air is contained energy. Uncontrolled release of this energy can cause serious injury or death. The following safety concerns relate to any work on components that could be under pressure.

- ➤ Close shut-off valves or otherwise isolate the blower block from the air distribution network to ensure that no compressed air can flow back into the block.
- ➤ Depressurize all pressurized components and enclosures.

Further information

Details of authorized personnel are found in chapter 3.4.3.

Details of dangers and their avoidance are found in chapter 3.5.

7.2 Instructions to be observed before commissioning

Incorrect or improper commissioning can cause injury to persons and damage to the block.

- ➤ Commissioning may only be carried out by trained and authorized installation and maintenance personnel.

Special measures for recommissioning after storage/standstill

Storage period/ standstill longer than:	Action
12 months	➤ Change the lubricating oil.
36 months	➤ Have the overall technical condition checked by an authorised KAESER service representative.

Tab. 19 Recommissioning after storage

7.3 Checking installation and operating conditions

➤ Check and confirm all the items of the checklist before commissioning the blower block.

To be checked	See chapter	Confirmed?
➤ Have all packaging materials and tools been removed from blower block?	–	
➤ Are operating personnel completely familiar with the applicable safety regulations?	–	
➤ Have all of the installation conditions been complied with?	5	
➤ Has automatic machine shutdown capability in the event of a fault been implemented by on-site safety devices?	6.6	
➤ Is there adequate lubricating oil in the gear-end and drive-end of the blower block? (Oil level in the centre of the sight glass)	10.3	
➤ Is the blower block anchored to the floor without stress?	6.4	
➤ Has it been verified that the rotors can be turned freely by hand?		

Tab. 20 Installation conditions checklist

7.4 Checking direction of rotation

The direction of rotation can be checked when the blower block is coupled to the drive. Necessary measures are dependent on the design of the drive and should be determined by the user.

An arrow indicating the correct direction of rotation is fixed on the side of the blower block at the drive end.

➤ Install a safety device that will stop the drive and build-up of suction pressure if the direction of rotation is incorrect.

➤ Check the direction of rotation on first start-up of the blower block and stop the drive immediately if incorrect.

The drive has been stopped because of incorrect direction of rotation?

➤ Take appropriate measures to ensure correct direction of rotation.

8 Operation

8.1 Switching on and off

On and off switching conditions are defined by the design of the machine into which the blower block is installed.

➤ The block may only be started when the permissible operating conditions are met.

8.2 Switching off in an emergency

The blower block is not equipped with an emergency stop device for immediate shut-down. Such a device must be installed by the user in the machine into which the blower block is fitted.

➤ Ensure the machine can be stopped immediately in an emergency.

9 Fault Recognition and Rectification

9.1 Basic instructions

The following tables are intended to assist in locating faults.

1. Do not attempt fault rectification measures other than those given in this manual!
2. In all other cases:
   Have the fault rectified by an authorized KAESER service representative.

9.2 Faults

Fault	Possible cause	Remedy
Unusual noise when running.	Permissible operating limits are exceeded.	Compare the operational conditions with the permissible operating limits. Call an authorized KAESER service representative.
	Lubricant missing in the oil chambers of the blower block.	Check the blower block for visible leaks. Replenish with lubricating oil. Call an authorized KAESER service representative.
Blower block runs too hot.	Permissible operating limits are exceeded.	Compare the operational conditions with the permissible operating limits. Call an authorized KAESER service representative.
	Oil level too low.	Check the blower block for visible leaks. Replenish with lubricating oil. Call an authorized KAESER service representative.
	Incorrect grade of oil used.	Drain incorrect oil and fill with correct oil.
	The blower block is dirty.	Clean the blower block regularly.
	Lubricating oil overheated.	Call an authorized KAESER service representative.
	Blower block overloaded.	Call an authorized KAESER service representative.

Fault	Possible cause	Remedy
Oil leaks from the gas drain.	Lubricating oil level too high.	Drain off lubricating oil until the correct level is reached.
Oil leaking from around the drive shaft.	Shaft sealing ring defective.	Call an authorized KAESER service representative.
Lubricating oil in the flow chamber.	Lubricating oil level too high.	Drain oil until the level is in the center of the oil sight glass. Clean the blower block. Call an authorized KAESER service representative.
Low intake flow volume.	Excessive rotor clearance because of wear.	Call an authorized KAESER service representative.
	Intake resistance too high.	Clean the inlet filter.
Black film on the oil sight glasses.	Oil not changed at the correct interval.	Change the lubricating oil. Clean or replace the oil sight glass. Clean the blower block. Call an authorized KAESER service representative.
	Insufficient lubricating oil.	Check the blower block for visible leaks. Change the lubricating oil. Clean or replace the oil sight glass.
	Lubricating oil overheated.	Call an authorized KAESER service representative.
	Blower block overloaded.	Call an authorized KAESER service representative.
Water in the lubricating oil.	Condensate build-up due to prolonged storage and high humidity.	Change the lubricating oil. Call an authorized KAESER service representative.

Tab. 21 Faults and troubleshooting

10 Maintenance

10.1 Safety

Follow the instructions below to ensure safe machine maintenance.

Warning instructions are located before a potentially dangerous task.

Disregard of warning instructions can cause serious injuries!

Complying with safety notes

Disregard of safety notes can cause unforeseeable dangers!

- ➤ Follow the instructions in chapter 3 “Safety and Responsibility”.
- ➤ Allow maintenance work to be performed by authorized personnel only.
- ➤ Make sure that no one is working on the machine.
- ➤ Make sure no personnel are working on the blower block before switching on.

When working on the compressed air system

Compressed air is contained energy. Uncontrolled release of this energy can cause serious injury or death. The following safety concerns relate to any work on components that could be under pressure.

- ➤ Close shut-off valves or otherwise isolate the block from the air distribution network to ensure that no compressed air can flow back into the block.
- ➤ Depressurize all pressurized components and enclosures.

Further information

Details of authorized personnel are found in chapter 3.4.3.

Details of dangers and their avoidance are found in chapter 3.5.

10.2 Maintenance schedule

10.2.1 Logging maintenance work

The maintenance intervals given are those recommended for average operating conditions.

- ➤ Maintenance tasks should be carried out more frequently where operating conditions are unfavorable (e.g. dusty ambient) or when the equipment is in constant use.
- ➤ Adjust the maintenance intervals with regard to local installation and operating conditions.

- ➤ Keep a log of all maintenance and service work.

  This enables the frequency of individual maintenance tasks and deviations from our recommendations to be determined.

Further information

A prepared log is provided in chapter 10.7.

10.2.2 Regular maintenance tasks

The table below lists the required maintenance tasks.

When operating conditions are unfavorable (e.g. dusty ambient) or when the equipment is in constant use, maintenance tasks must be carried out more frequently (shorter intervals).

➤ Carry out maintenance tasks in a timely manner, taking the ambient and operating conditions into consideration:

Interval	Maintenance task	See chapter
500 h after initial commissioning [1]	Change the lubricating oil.	10.5
Up to 500 h or monthly	Check the lubricating oil level.	10.3
Up to 1000 h	Clean the blower block.	10.6
Up to 3000 h, At least once a year [2]	Change the FGB 220 lubricating oil. (An adhesive label identifying the lubricant used is attached to the blower block.)	10.5
Up to 6000 h At least every 2 years [2]	Change the SB 220 lubricating oil. (An adhesive label identifying the lubricant used is attached to the blower block.)	10.5
As required	Check rotors for contamination.	10.6.1

h = operating hours

[1] Not applicable in the case of initial commissioning by an authorized KAESER service representative.

[2] The intervals for lubricating oil changes must be reduced at times of high thermal stresses and can be determined upon analysis of the oil.

Tab. 22 Regular maintenance tasks

10.2.3 Regular service tasks

The table below lists necessary service tasks.

➤ Only an authorized KAESER service representative should carry out service work.

➤ Have service tasks carried out punctually, taking ambient and operating conditions into account:

Interval	Service task
Up to 36000 h	(Option B25 and B26) Replace the radial shaft seal.

h = operating hours

Tab. 23 Regular service tasks

10.3 Checking the oil level

The oil level is correct when it is in the center of the oil sight glasses.

⚠ WARNING

Danger of burns from hot components!

➤ *Wear long-sleeved clothing and protective gloves.*

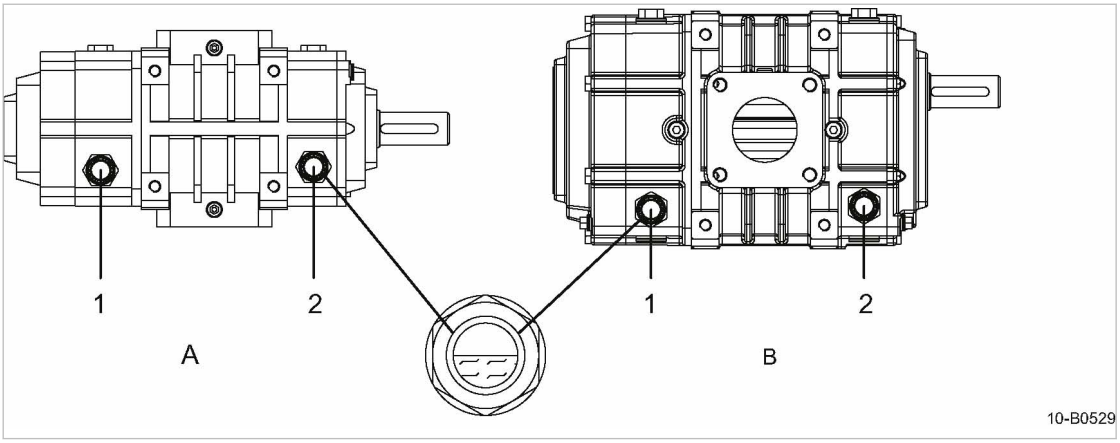

Fig. 7 Checking the lubricating oil level

A	Direction of flow: vertical (Option B5)	1	Gear-end oil sight glass
B	Direction of flow: horizontal (Option B6)	2	Drive-end oil sight glass

- ➤ Only check the oil level when the machine is switched off, as the level changes constantly during operation.
- ➤ Check the oil level via the oil sight glasses at both the gear- and drive-ends, since their oil chambers are not connected.
- ➤ Check the blower block for visible leaks at the two gas drainage ports on the underside, see chapter 6.4.
- ➤ If the oil level has dropped, do not recommission the machine until the cause of the fault has been remedied, see chapter 9.2.

10.4 Replenishing lubricating oil

A sticker on the blower block specifies the type of oil to be used.

The blower block must be isolated from the compressed air network and completely vented before undertaking any work on the pressure system.

Precondition The power supply disconnecting device is switched off,
the device is locked in the off position,
the oil level has settled.

⚠ WARNING

Danger of burns from hot components and oil!

- ➤ *Wear long-sleeved clothing and protective gloves.*

NOTICE

Unsuitable oil can damage the block!

- ➤ *Never mix different types of oil.*
- ➤ *Never top up with a different type of oil to that already used in the blower block.*

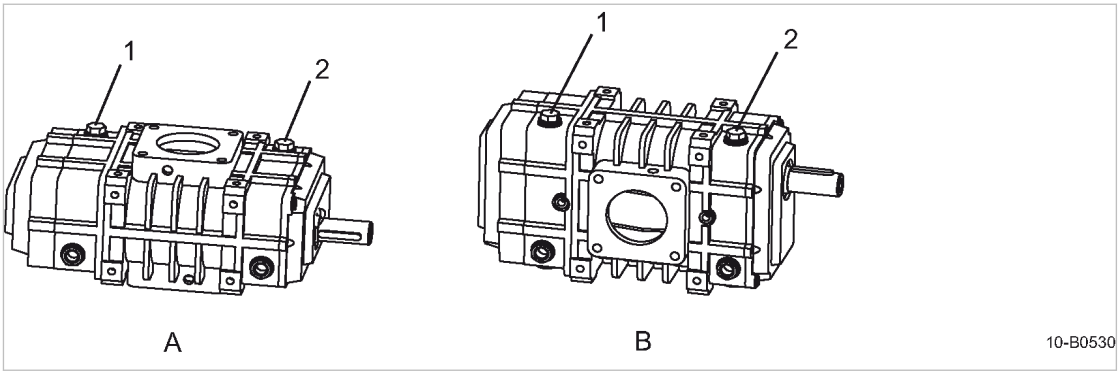

Fig. 8 Replenishing lubricating oil

A	Flow direction: vertical (Option B5)	1	Plug (gear-end oil filling port)
B	Flow direction: horizontal (Option B6)	2	Plug (drive-end oil filling port)

1. Slowly unscrew the oil inlet screw plug 1 at the gear-end and/or the oil inlet 2 at the drive end.
2. Top off until the level is in the center of the sight glasses.
3. Screw in the oil inlet plugs.
4. Visually check for leaks.

10.5 Changing the oil

The blower block must be isolated from the compressed air network and completely vented before undertaking any work on the pressure system.

The oil should be changed at a block temperature of approximately 130°F to ensure the oil flows freely.

Drain the oil thoroughly from:

- Gear-end
- Drive-end

Material Lubricating oil

Oil receptacle

⚠ WARNING

Danger of burns from hot components and oil!

➤ *Wear long-sleeved clothing and protective gloves.*

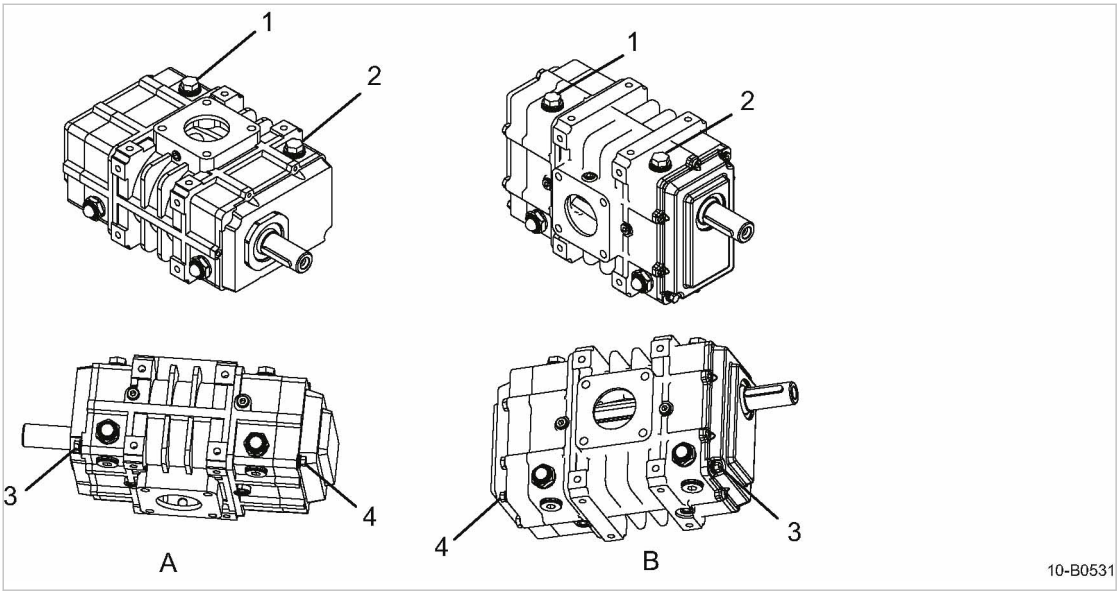

Fig. 9 Changing the oil

A	Flow direction: vertical (Option B5)	2	Plug (drive-end oil filling port)
B	Flow direction: horizontal (Option B6)	3	Plug (drive-end oil drain port)
1	Plug (gear-end oil filling port)	4	Plug (gear-end oil drain port)

Draining the oil

1. Prepare an oil receptacle.
2. Loosen the oil inlet screw plugs 1 and 2.
3. Remove the oil inlet screw plugs 3 and 4.
4. Drain the lubricating oil.
5. Replace the screw plugs in the drain ports.

Dispose of the old lubricating oil in accordance with local environmental protection regulations.

Replenishing oil

1. Add lubricating oil until the level is in the center of the oil sight glasses.
2. Check the lubricating oil level.
3. Replace the screw plugs in the oil filling ports.
4. Visually check for leaks.

10.6 Clean the blower block

Regularly clean the blower block. This ensures reliable cooling of the machine. The frequency is mainly dependent on local ambient conditions.

Clogged blower blocks are indicative of unfavorable ambient conditions. Dirt deposits deteriorate the heat dissipation. This can result in damages due to overheating, resulting in increased wear and tear.

Material
Brush and/or compressed air
Protective gloves
Respiratory protection and safety goggles (if required)
Vacuum cleaner

Precondition
Cut-off the electrical power supply via the power supply disconnecting device,
ensure that the device is locked off and tagged out,
verify the absence of any voltage.

The machine has cooled down.

1. Dismantle panels in order to clean the cooling air ducts of the drive motor.
2. Dry brush blower block or blow off with compressed air.
3. Vacuum off dirt.
4. Replace and lock panels.

The blower block can't be cleaned thoroughly?

➤ Have severe clogging removed by an authorized KAESER service representative.

10.6.1 Checking rotors for contamination

Any dust in the conveyed medium can build up inside the block.

The block must be isolated from the compressed air network and completely vented before undertaking any work on the pressure system.

Precondition
The power supply disconnecting device is switched off,
the device is locked off,
the absence of any voltage has been verified.

The block has cooled down.

⚠ CAUTION

Rotating rotors!
Danger of pinching or severing of extremities.

➤ *Isolate the drive from the power supply and lockout and tagout.*

1. Disconnect the flange connections and look for contamination inside the block.
2. If necessary, have the blower block cleaned by an authorized KAESER service representative.

10.7 Documenting maintenance and service work

Machine equipment number:

➤ Enter any maintenance and service work carried out in the table below.

Date	Maintenance task carried out	Operating hours	Signature

Tab. 24 Logged maintenance tasks

11 Spares, Operating Materials, Service

11.1 Note the nameplate

The nameplate contains all information to identify your blower block. This information is essential to us in order to provide you with optimal service.

➤ Please give the information from the nameplate with every inquiry and order for spare parts.

11.2 Ordering spare parts and operating fluids/materials

KAESER spare parts and operating fluids/materials are original KAESER products. They are specifically selected for use in KAESER machines.

⚠ WARNING

There is risk of personal injury or damage to the machine resulting from the use of unsuitable spare parts or operating fluids/materials!
Unsuitable or poor quality spare parts and operating fluids/materials may damage the machine or impair its proper function.
Damage to the machine can also result in personal injury.

➤ *Use only original parts and operating fluids/materials.*

➤ *Have an authorized KAESER service representative carry out regular repair and maintenance.*

Name	Number
Cooling oil	1600

Tab. 25 Ordering spare parts and operating fluids/materials

11.3 KAESER AIR SERVICE

KAESER AIR SERVICE offers:

- authorized KAESER service representatives with KAESER factory training,
- increased operational reliability ensured by preventive maintenance,
- energy savings achieved by avoidance of pressure losses,
- optimum conditions for operation of the compressed air system,
- the security of genuine KAESER spare parts,
- increased legal certainty as all regulations are kept to.

➤ Why not sign a KAESER AIR SERVICE maintenance agreement!

Result Your advantage:
lower costs and higher compressed air availability.

11.4 Completing the Declaration of Decontamination

Every company (user) is responsible for the health and safety of its employees. This extends to personnel who carry out servicing work at the user or service contractor.

A Declaration of Decontamination must be completed and signed whenever maintenance or repair work is carried out on the blower block.

1. Contact KAESER SERVICE and request the Declaration of Contamination form.
2. Attach a copy of the Declaration of Contamination to the **outside** of the packing.

12 Decommissioning, Storage and Transport

12.1 Decommissioning

Decommissioning is necessary, for example, under the following circumstances:

- The blower block is (temporarily) not needed.
- The block is to be moved to another location.
- The block is to be scrapped.

Temporary decommissioning

Precondition The blower block can be run at regular intervals.

➤ Run the blower block once a week for at least 30 minutes at operating temperature to ensure corrosion protection.

Long-term decommissioning

1. Allow the blower block to completely cool down.
2. Spray the block inside and out with a preservative agent to prevent corrosion.
3. Close off the flange connections.
4. Store the blower block in a dry, frost-proof room.

Further information For information on preservative oils, please see chapter 12.4.

12.2 Packing

A wooden crate is required for overland transport to protect the blower block from mechanical damage.

Other measures must be taken for the transport of the blower block by sea or air. Please contact an authorized KAESER service representative for more information.

Material Covers for flange connections

Wooden transport crate

Precondition The block is decommissioned.

The block is dry and cooled down.

1. Drain the lubricating oil.
2. Close off the oil drain port.
3. Close off the flange connections.
4. Protect the block in a wooden crate against mechanical damages.

12.3 Transportation

12.3.1 Safety

The weight determines the required means of transport.

➤ Do not lift the blower block by the shaft end.

Precondition Transportation must only be carried out using a hoist and by personnel who, due to their training, are authorized for the safe handling of transported goods.

➤ Ensure that the danger area is clear of personnel.

Further information Weight specifications can be found in chapter 2.3.

12.3.2 Transporting the blower block with a crane

Use suitable lifting gear to ensure correct transportation.

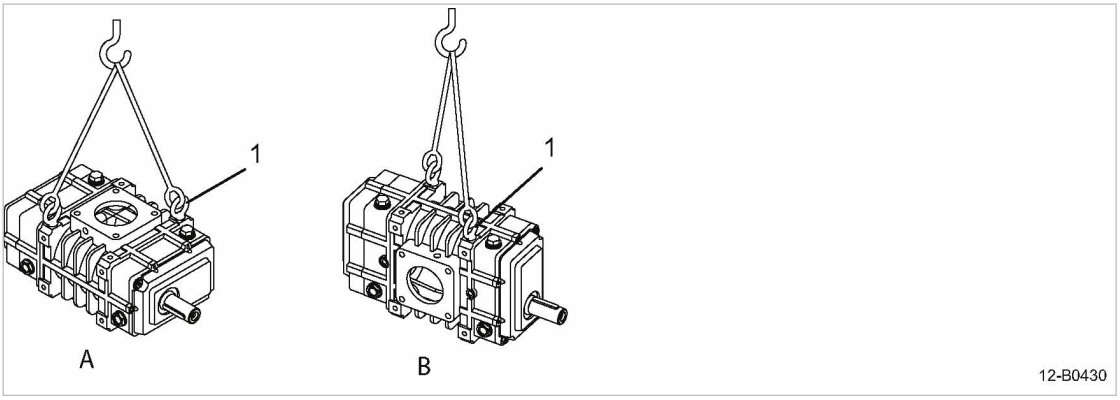

Fig. 10 Transport by crane

A Direction of flow: vertical (Option B5)
B Direction of flow: horizontal (Option B6)
1 Eye bolt

➤ Tightly screw the eye bolts provided crosswise into the corresponding holes in the base.

➤ Only lift and transport the blower block by means of the eye bolts.

12.4 Storage

Moisture can lead to corrosion, particularly on the surfaces of the blower block. The storage temperature must not fall below -22°F.

Should you have any questions concerning the correct storage and recommissioning procedure, an authorized KAESER service representative will be glad to assist you.

⚠ CAUTION

Rotating lobes!
Danger of crushing or severing limbs.

➤ *Do not reach into the interior of the blower block.*

➤ *If full protection is only provided when the blower block is completely installed in the machine, then in all other phases of the blower block's life-cycle, temporary protective devices (e.g. covers) must be fitted in order to guarantee that body parts cannot reach or be caught/sucked in by the rotary lobes.*

NOTICE

Damage to the blower block due to moisture and frost!

- ➤ *Prevent the ingress of moisture and formation of condensation.*
- ➤ *Store the blower block in a dry room.*
- ➤ *Spray a suitable preservative oil into the flange connections, drive shaft and flow chamber to protect from corrosion.*

- ➤ Seal openings on the blower block to prevent the introduction of foreign articles and contamination:
  - Insert screw plugs into the drill holes.
  - Close flange connections with plastic caps.
- ➤ Change the lubricating oil annually.

Following long-term storage

- ➤ Remove the preservative oil from the flow chamber using cold cleaner.
- ➤ Observe the procedures for assembly and initial commissioning.
- ➤ Change the lubricating oil.

12.5 Disposal

1. Drain the lubricating oil completely from the blower block.
2. Seal the flange connections.
3. Hand the blower block over to an authorized disposal expert or return it to KAESER.

- ➤ Dispose of lubricating oil in accordance with applicable environmental regulations.

13 Annex

13.1 Permissible loads on the blower block

The maximum permissible loads on the blower block can be found in table format at the end of this chapter.

The are separate tables for:

- Maximum permissible loads on the drive shaft, see chapter 13.1.1 for legend
- Maximum permissible loads on the inlet and discharge ports, see chapter 13.1.2 for legend
- Design information for the drive system, see chapter 13.1.3 for legend

➤ Adhere to the maximum permissible loads when installing the blower block and drive, as well as in all operating states.

Coordinate system for permissible loads

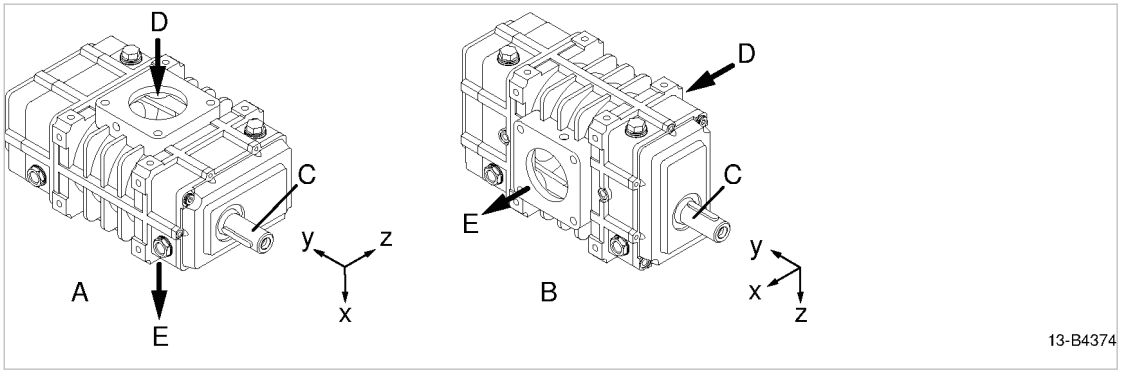

Fig. 11 Coordinate system for permissible loads

- A Direction of flow: vertical (Option B5)
- B Direction of flow: horizontal (Option B6)
- C Drive shaft
- D Direction of flow to inlet port
- E Direction of flow to discharge port

The position of the inlet and discharge ports is explained in chapter 4.2.3.

Polar diagram for drive shaft radial force

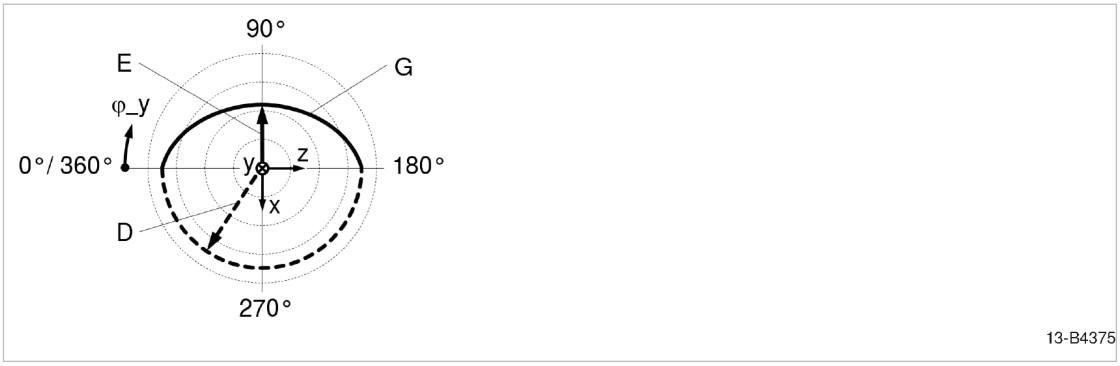

Fig. 12 Polar diagram for drive shaft radial force

- D F_DS.xz.180-360
- E F_DS.xz.90
- F F_DS.y (not illustrated)
- G Continuous transfer between D and E permissible

The polar diagram serves as a schematic illustration of the maximum permissible radial force on the drive shaft seen from the visible shaft end.

13.1.1 Maximum permissible loads on the drive shaft

Refer to Figs 11 and 12.

	Legend
F_DS.xz.180-360	Maximum permissible radial force on the drive shaft for φ_y = 180°-360°
F_DS.xz.90	Maximum permissible radial force on the drive shaft for φ_y = 90°
F_DS.y	Maximum permissible axial force on the drive shaft
M_DS.x	Maximum permissible bending moment on the drive shaft around the x-axis
M_DS.y	Maximum permissible torque on the drive shaft
M_DS.z	Maximum permissible bending moment on the drive shaft around the z-axis

Tab. 26 Table legend: Maximum permissible loads on the drive shaft

13.1.2 Maximum permissible loads on the inlet and discharge ports

Refer to Fig. 11.

	Legend
F_FL.x	Maximum permissible force on the inlet and discharge ports in the x-direction
F_FL.y	Maximum permissible force on the inlet and discharge ports in the y-direction
F_FL.z	Maximum permissible force on the inlet and discharge ports in the z-direction
M_FL.x	Maximum permissible torque on the inlet and discharge ports around the x-axis
M_FL.y	Maximum permissible torque on the inlet and discharge ports around the y-axis
M_FL.z	Maximum permissible torque on the inlet and discharge ports around the z-axis

Tab. 27 Table legend: Maximum permissible loads on the inlet and discharge ports

13.1.3 Design information for the drive system

Refer to Fig. 11.

	Legend
J_rot.y	Rotational moment of inertia for rotating masses connected to the drive shaft in relation to axis of rotation y
m_rot.y	Rotating mass around axis of rotation y

Tab. 28 Table legend: Design information for the drive system

Maximal zulässige Lasten an der Antriebswelle

Maximum permissible drive shaft load

Typ	± F_DS,xz,180-360 [N]	± F_DS,xz,90 [N]	± F_DS,y [N]
OMEGA 52 P	3500	2600	0
OMEGA 53 P	3500	2000	0

Typ	± M_DS,x [Nm]	M_DS,y [Nm]	± M_DS,z [Nm]
OMEGA 52 P	30	120	30
OMEGA 53 P	30	180	30

Maximal zulässige Lasten an Saug- und Druckflansch

Maximum permissible load on inlet and discharge flange connection

Option B5: Förderrichtung vertikal

Option B5: Flow direction vertical

Typ	± F_FL,x [N]	± F_FL,y [N]	± F_FL,z [N]	± M_FL,x [Nm]	± M_FL,y [Nm]	± M_FL,z [Nm]
OMEGA 52 P	500	0	500	0	50	50
OMEGA 53 P	500	0	500	0	50	50

Option B6: Förderrichtung horizontal

Option B6: Flow direction horizontal

Typ	± F_FL,x [N]	± F_FL,y [N]	± F_FL,z [N]	± M_FL,x [Nm]	± M_FL,y [Nm]	± M_FL,z [Nm]
OMEGA 52 P	250	0	250	25	25	0
OMEGA 53 P	250	0	250	25	25	0

Angaben zur Auslegung des Antriebssystems

Information to design the drive system

Typ	J_rot,y [kg·m²]	m_rot,y [kg]
OMEGA 52 P	0,149	59,6
OMEGA 53 P	0,220	82,9

13.2 Dimensional drawing

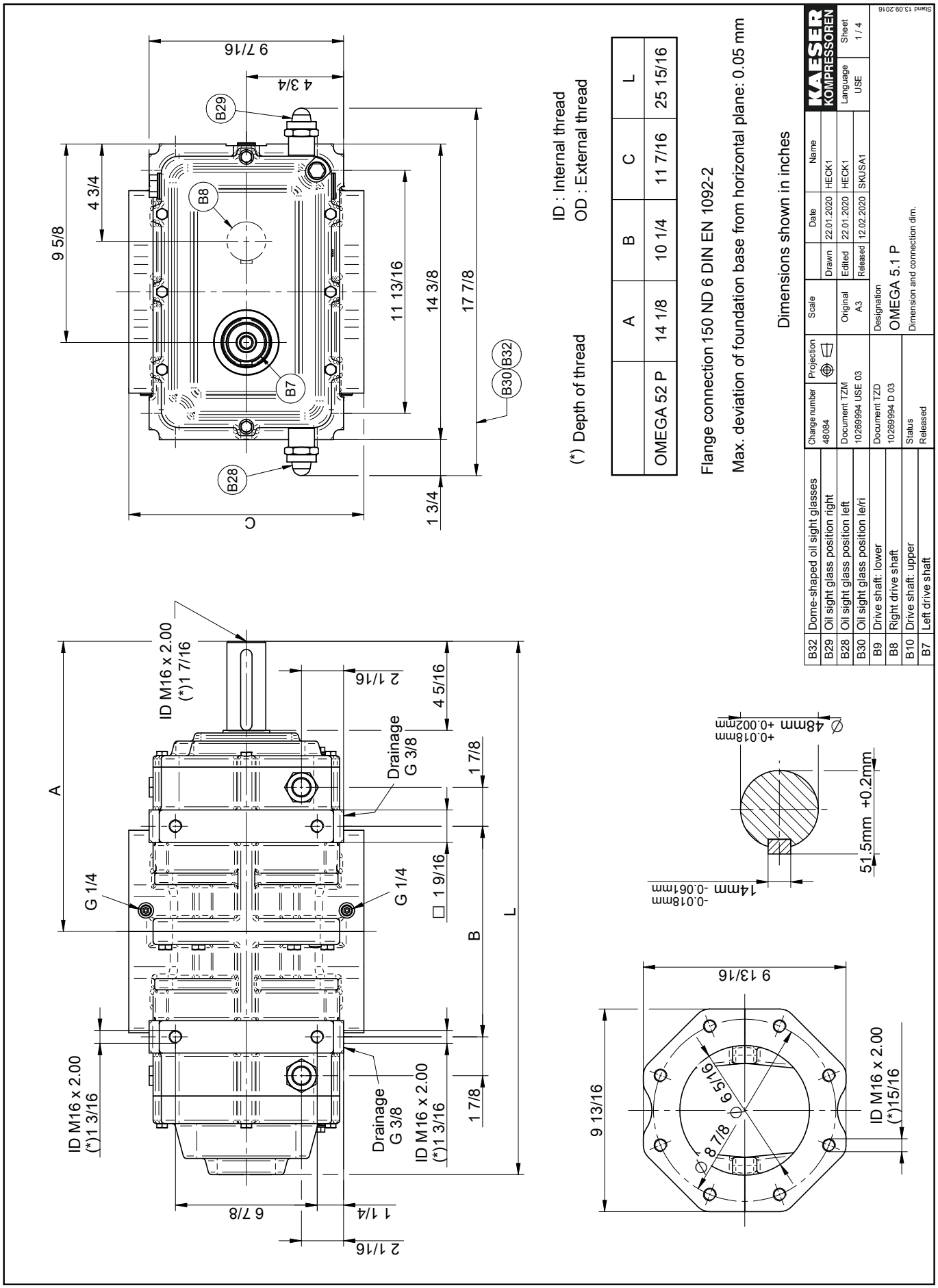

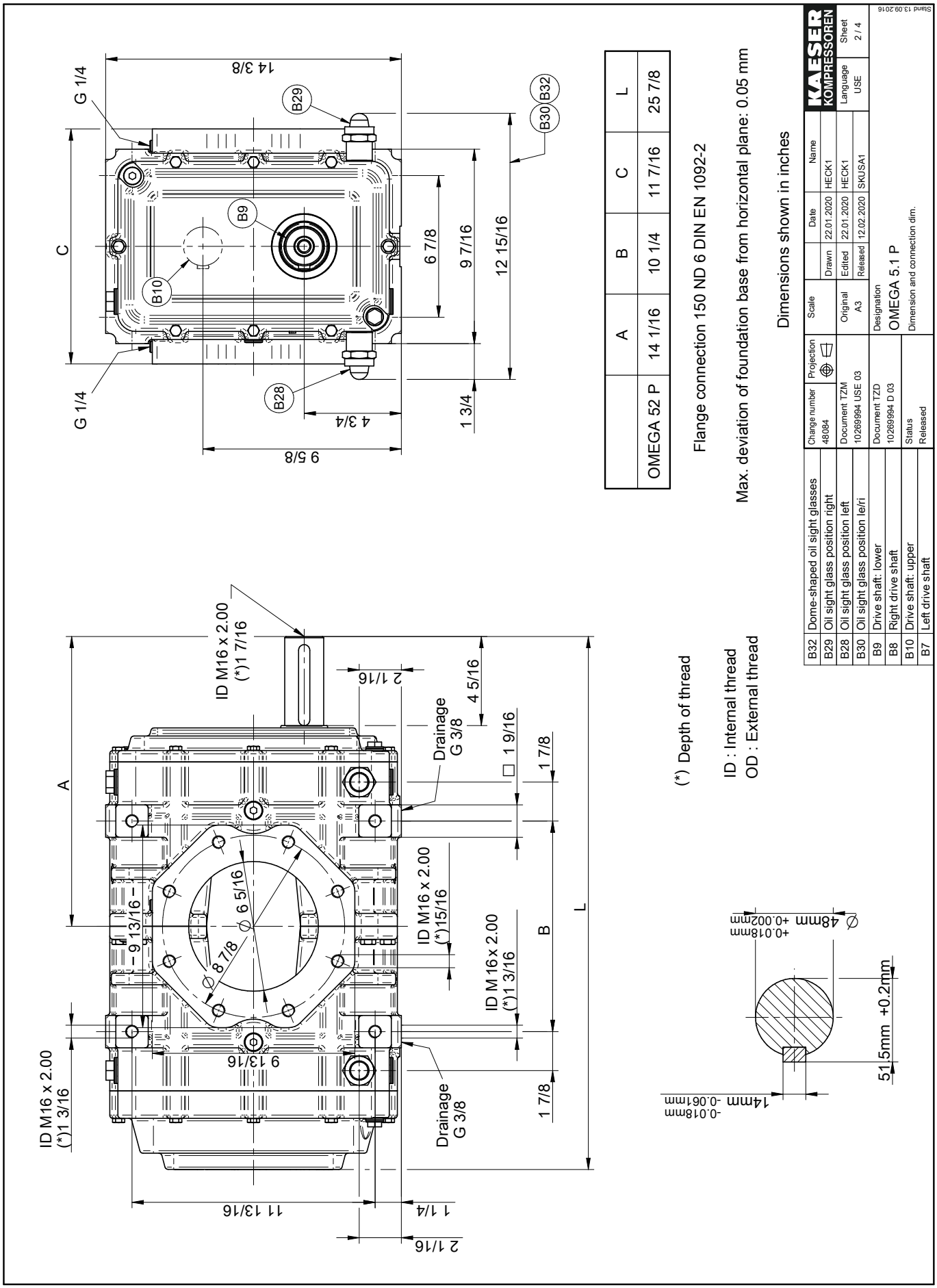

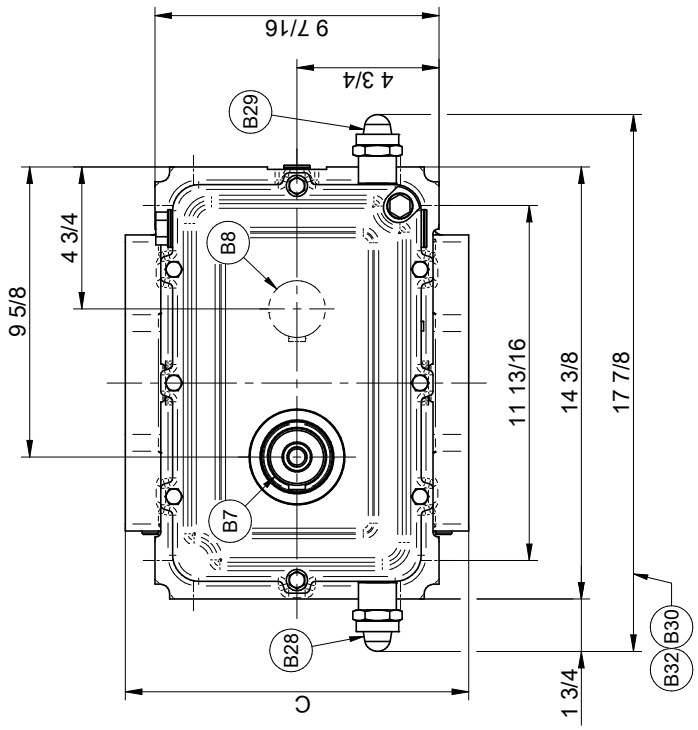

ID : Internal thread
OD : External thread

(*) Depth of thread

	A	B	C	L
OMEGA 53 P	16 9/16	15 3/16	11 7/16	30 13/16

Flange connection 150 ND 6 DIN EN 1092-2

Max. deviation of foundation base from horizontal plane: 0.05 mm

Dimensions shown in inches

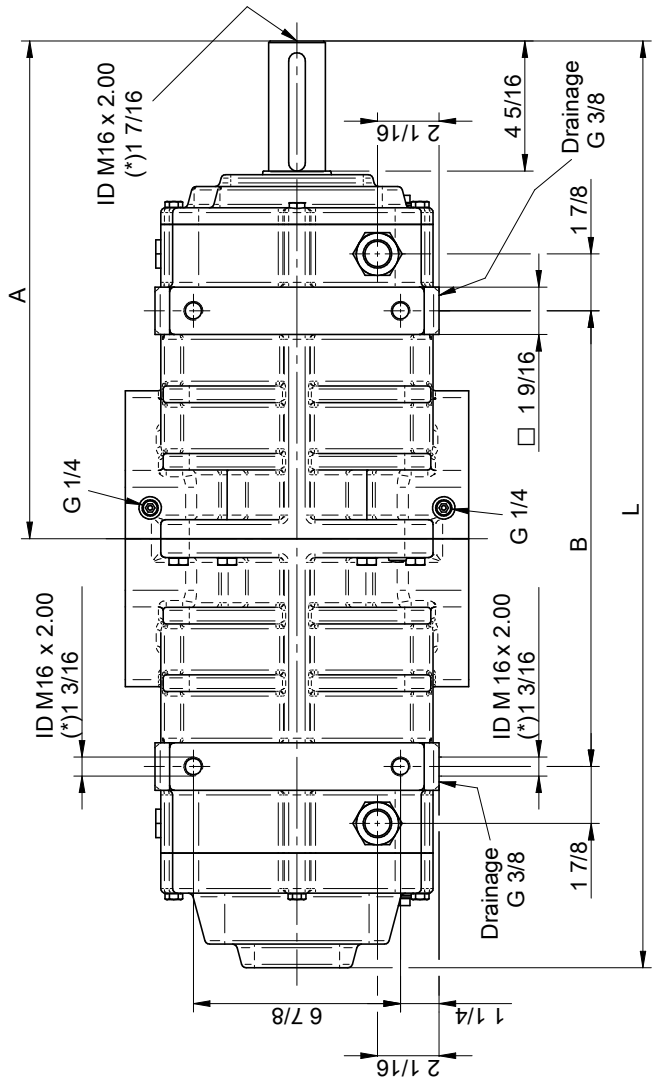

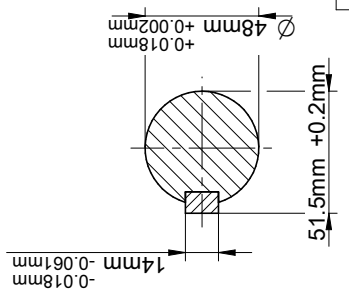

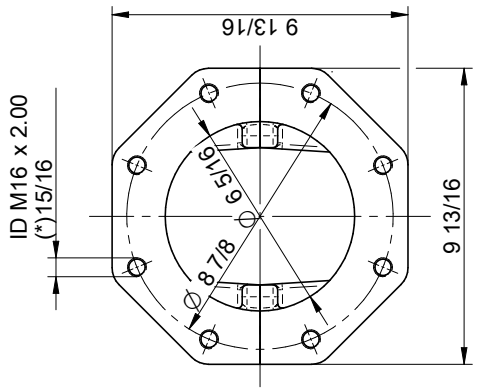

B32	Dome-shaped oil sight glasses	Change number	Projection	Scale		Date	Name	KAESER KOMPRESSOREN	
B29	Oil sight glass position right	48084			Drawn	22.01.2020	HECK1		
B28	Oil sight glass position left	Document TZM		Original	Edited	22.01.2020	HECK1	Language	Sheet
B30	Oil sight glass position le/ri	10269994 USE 03		A3	Released	12.02.2020	SKUSA1	USE	3 / 4
B9	Drive shaft: lower	Document TZD		Designation					
B8	Right drive shaft	10269994 D 03		OMEGA 5.1 P					
B10	Drive shaft: upper	Status		Dimension and connection dim.					
B7	Left drive shaft	Released							

Stand 13.09.2016

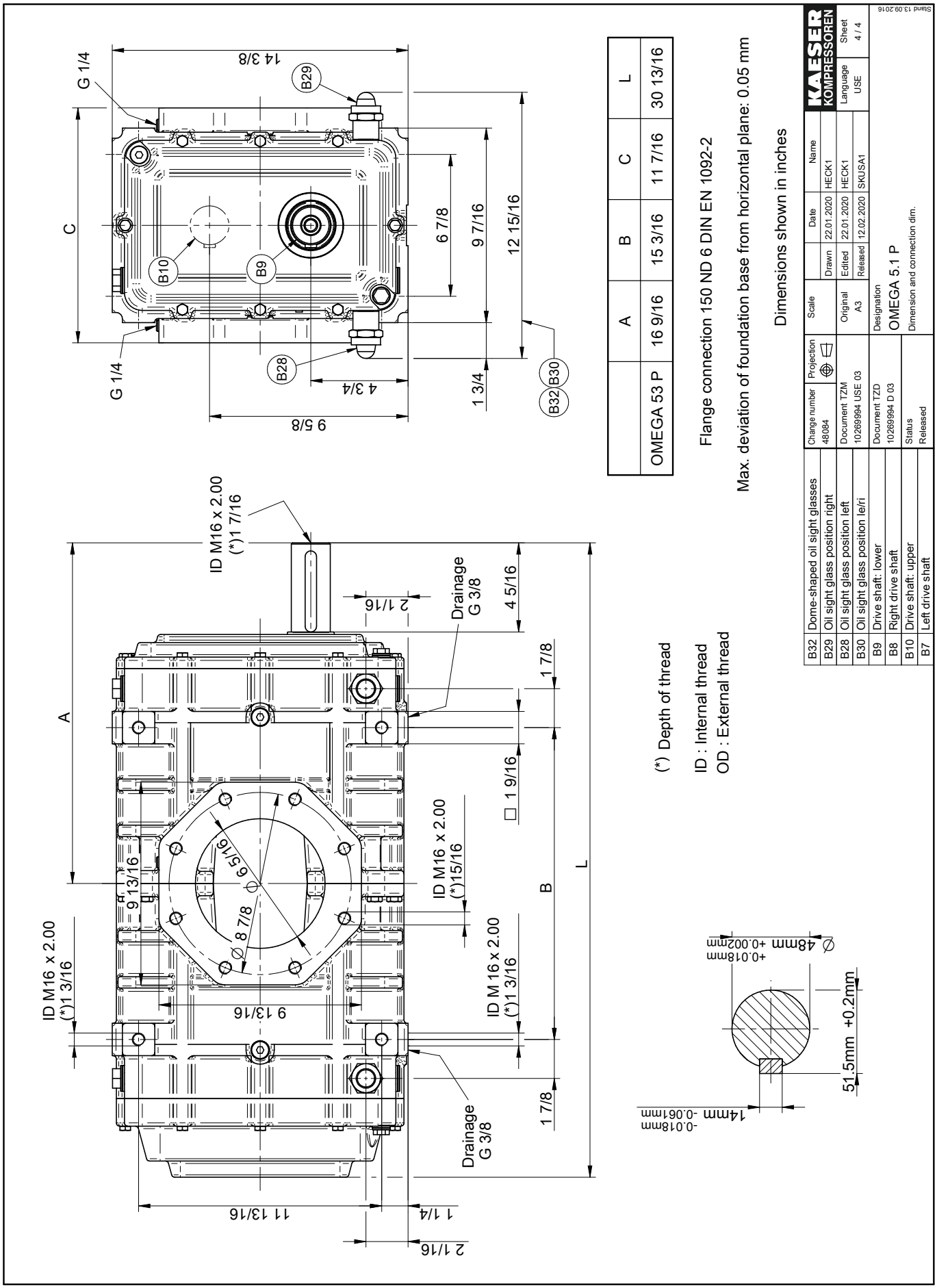

	A	B	C	L
OMEGA 53 P	16 9/16	15 3/16	11 7/16	30 13/16